This Document Contains Confidential information, the Dissemination, Publication, Copying or Duplication of this Document or any hardware, software, or ideas described herein without Prior Written Authorization is Strictly Prohibited.
© 2023 Middleby Food Service Equipment (Qingdao) Co., Ltd.

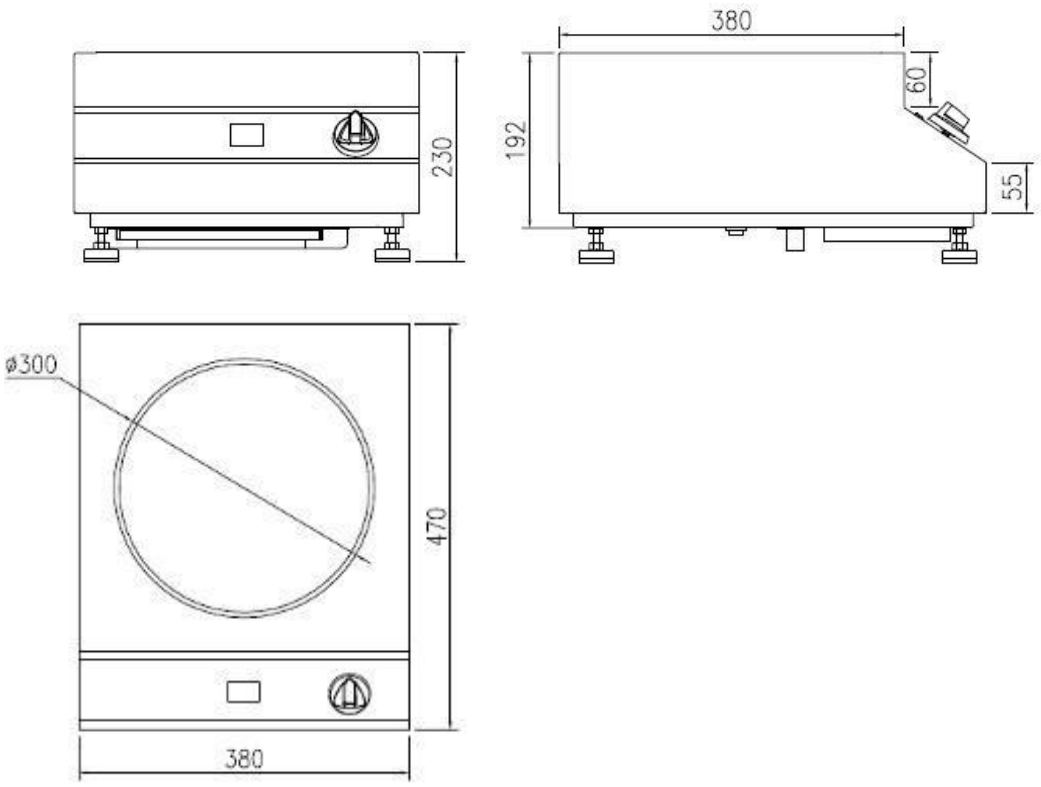

This Document Contains Confidential information, the Dissemination, Publication, Copying or Duplication of this Document or any hardware, software, or ideas described herein without Prior Written Authorization is Strictly Prohibited.
© 2023 Middleby Food Service Equipment (Qingdao) Co., Ltd.